Your Peace of Mind is Our Top Priority®

Product information presented here reflects conditions at time of publication. Consult factory regarding discrepancies or inconsistencies.

ZOELLER®

PUMP COMPANY

Zoeller Family of Water Solutions™

50/60Hz

FM0496_Ec
0414
Supersedes
New

MAIL TO: *P.O. BOX 16347 • Louisville, KY 40256-0347*
SHIP TO: *3649 Cane Run Road • Louisville, KY 40211-1961*
(502) 778-2731 • 1 (800) 928-PUMP • FAX (502) 774-3624

visit our web site:
www.zoeller.com

REPLACEMENT PARTS LIST FOR MODELS:

U282 AUTOMATIC 220V/1PH/50HZ
BK282 AUTOMATIC 220V/1PH/60HZ
V282 NONAUTOMATIC 220V/1PH/50HZ
BL282 NONAUTOMATIC 220V/1PH/60HZ

TO ORDER REPLACEMENT PARTS:

PLEASE FURNISH THE FOLLOWING INFORMATION:

- Model Number.
- Part Number of Pump.
  (If manufactured prior to June 1988, give 2 letter date code following Model No.)
- Part Number and Description of part.

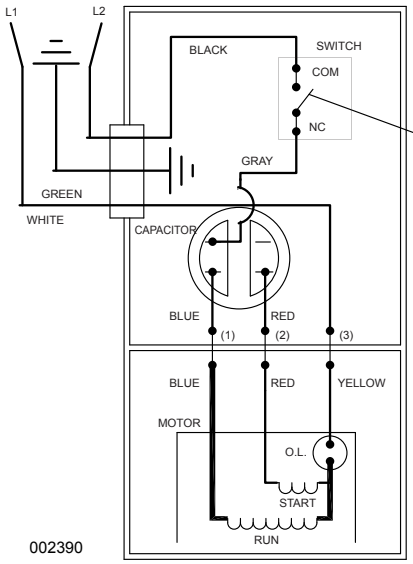

WIRING DIAGRAM FOR MODELS
"U282-A" and "BK282-A"
8/98 thru Current

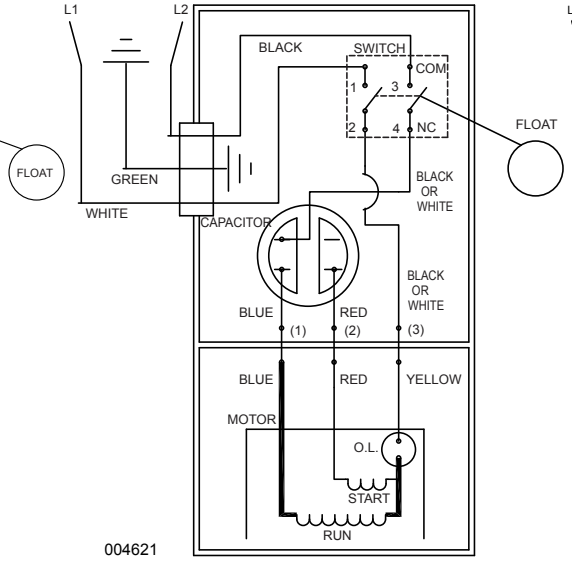

WIRING DIAGRAM FOR MODELS
"U282-B", "U282-C" and "BK282-B", "BK282-C"
8/98 thru Current

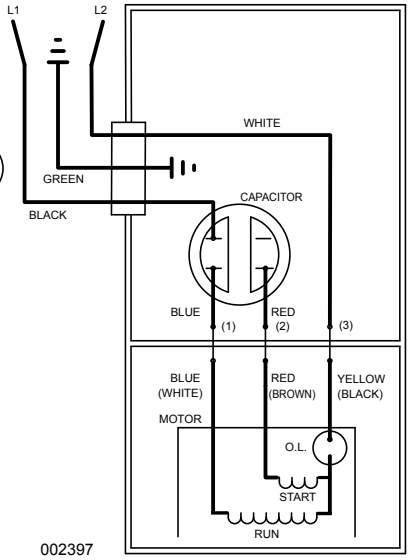

WIRING DIAGRAM FOR MODELS
"V282-A", "V282-B" and "V282-C"
"BL282-A", "BL282-B" and "BL282-C"
8/98 to Current

© Copyright 2014 Zoeller Co. All rights reserved.

REPLACEMENT PARTS LIST FOR MODELS “U282”.

See page 6 for illustration.

				MODELS: U282-A,B	U282-C
REF. NO.	DESCRIPTION	QTY	NOTES	8/98 thru 5/10	6/10 thru Current
1	Case Sw & Cord (Cord, HO7RN-F 3G1.5Mm-20' length no plug)	1	2	152029	152029
	Case Sw & Cord (Cord-33' length BS 1363/A; UK Plug)			151264	151264
	Case Sw & Cord (Cord-15' length CEE 7/7; E/F Plug)			152033	152033
	Case Sw & Cord (Cord-15' length AS/NZS 3112; I Plug)			152034	152034
2	• Guard	1		001023	001023
3	Case-Mach	1	2	004614	004614
4	• Arm & Seal Asm	1		004745	004745
5	• Gasket, Case/Cover	1		001011	001011
6	Switch Asm	1		004755	004755
7	• Wire Pkg	1		004756	004756
8	Relay	1		N/A	N/A
9	Capacitor & Clamp Asm	1		002381	002381
10	Float, Plastic	1		094039	094039
11	Guide Asm, Flt Rod	1		094048	094048
12	Rod Asm, Flt	1		001043	150438
13	Housing, Mtr-& Str	1	1	003172	150949
14	Bearing, Sleeve	1		001012	N/A
	• Bearing, Radial			N/A	006703
15	• Handle	1		217069	217069
16	Cord Term&Seal (Ho7RN-F 3G1.5Mm-20' length no plug)	1	2	152020	152020
	Cord Term&Seal (33' length BS 1363/A; UK Plug)			151262	151262
	Cord Term&Seal (15' length CEE 7/7; E/F Plug)			152017	152017
	Cord Term&Seal (15' length AS/NZS 3112; I Plug)			152015	152015
17	Clamp, Strain Relief	1	2	152191	152191
18	• *Seal, Cord-Asm & Str Rlf	1	2	151312	151312
19	• *Plug, Test-White	2		034090	034090
20	• *Seal, Thru Wall Term	3		003402	003402
21	Rotor & Brg	1		007978	150874
22	*Bearing, Radial	1		001013	010069
23	*Seal, Mtr Hsg	1		001014	001014
24	*Oil, Dielectric	1		003168	011066
25	Adapter-Mach	1		001003	001003
26	*Seal, Shaft	1		002430	002430
27	Flange Pkg 2" Npt	1		10-1305	10-1305
	Flange Pkg 3" Npt			10-1306	10-1306
28	Impeller	1		002999	002999
29	Housing, Pump-Mach	1		217012	217012
30	*Screw, #10-24 X .375 RHM-Sl SS	2		001883	001883
31	*Screw, #6-32 X .25 RHM Sl Tc Stlgr	4		001877	001877
32	*Screw, .25-20 X .75 HHm-SS	4		001916	001916
33	*Screw, #6-32 X .438 Rhsltp Stlzi	2		004644	004644
34	*Screw, .5-13 X 2 HH Cap-SS	2		001909	001909
35	*Washer, SS-1.25Od X .562Id X .078	2		002115	002115
36	*Screw, .313-18 X 1 HH Cap-SS	4		002608	002608
37	*Screw, .25-20 X 1 HHm-SS	4		007790	007790
¤	Rebuild Kit			152036	152037

• Items included in Rebuild Kit. ¤ Not Shown in Illustration.

NOTES:

1) Mtr. Hsg., Brg., Stator & Term. (Item 13) are preassembled at the factory and must be replaced as a unit. Stator is permanently attached to the Motor Housing. Plug (Item 19); Seal, Thru Wall Term. (Item 20) and Bearing - Upper (Item 14) are replaceable.
2) When ordering these parts, customer must identify if switch is a General Electric switch.
3) When ordering Motor Housing, Bearing, Stator and Term. (Item 13) or Rotor (Item 21) specify either GE or Emerson motor. GE motor can be identified by (4) holes spaced at 90° around the outside diameter of the stator. Emerson motor can be identified by (4) flat edges spaced at 90° around the outside diameter of the stator.
4) If an “X” follows Model No., or Date Mfg. on brass ID tag, consult factory for ordering any parts.
5) See FM0160 Parts Price Sheet for listing of parts prices.
6) “NA” indicates, not applicable.

© Copyright 2014 Zoeller Co. All rights reserved.

REPLACEMENT PARTS LIST FOR MODELS “BK282”.

See page 6 for illustration.

				MODELS: BK282-A,B,C	BK282-D
REF. NO.	DESCRIPTION	QTY	NOTES	5/95 thru 5/10	6/10 thru Current
1	Case Sw & Cord (Cord-10' length CEE 7/7; E/F Plug)			152035	152035
2	• Guard	1		001023	001023
3	Case-Mach	1	2	004614	004614
4	• Arm & Seal Asm	1		004745	004745
5	• Gasket, Case/Cover	1		001011	001011
6	Switch Asm	1		004755	004755
7	• Wire Pkg	1		004756	004756
8	Relay	1		N/A	N/A
9	Capacitor & Clamp Asm	1		002381	002381
10	Float, Plastic	1		094039	094039
11	Guide Asm, Flt Rod	1		094048	094048
12	Rod Asm, Flt	1		001043	150438
13	Housing, Mtr-& Str	1	1	003172	150949
14	Bearing, Sleeve	1		001012	N/A
	• Bearing, Radial			N/A	006703
15	• Handle	1		217069	217069
16	Cord Term&Seal (10' length CEE 7/7; E/F Plug)			152022	152022
17	Clamp, Strain Relief	1	2	152191	152191
18	• Seal, Cord-Asm & Str Rlf	1	2	151312	151312
19	• Plug, Test-White	2		034090	034090
20	• Seal, Thru Wall Term	3		003402	003402
21	Rotor & Brg	1		007978	150874
22	• Bearing, Radial	1		001013	010069
23	• Seal, Mtr Hsg	1		001014	001014
24	• Oil, Dielectric	1		003168	011066
25	Adapter-Mach	1		001003	001003
26	• Seal, Shaft	1		002430	002430
27	Flange Pkg 2" Npt	1		10-1305	10-1305
	Flange Pkg 3" Npt			10-1306	10-1306
28	Impeller	1		002998	002998
29	Housing, Pump-Mach	1		217012	217012
30	• Screw, #10-24 X .375 RHM-Sl SS	2		001883	001883
31	• Screw, #6-32 X .25 RHM Sl Tc Stlgr	4		001877	001877
32	• Screw, .25-20 X .75 HHm-SS	4		001916	001916
33	• Screw, #6-32 X .438 Rhsltp Stlzi	2		004644	004644
34	• Screw, .5-13 X 2 HH Cap-SS	2		001909	001909
35	• Washer, SS-1.25Od X .562Id X .078	2		002115	002115
36	• Screw, .313-18 X 1 HH Cap-SS	4		002608	002608
37	• Screw, .25-20 X 1 HHm-SS	4		007790	007790
¤	Rebuild Kit			152036	152037

• Items included in Rebuild Kit. ¤ Not Shown in Illustration.

NOTES:

1) Mtr. Hsg., Brg., Stator & Term. (Item 13) are preassembled at the factory and must be replaced as a unit. Stator is permanently attached to the Motor Housing. Plug (Item 19); Seal, Thru Wall Term. (Item 20) and Bearing - Upper (Item 14) are replaceable.
2) When ordering these parts, customer must identify if switch is a General Electric switch.
3) When ordering Motor Housing, Bearing, Stator and Term. (Item 13) or Rotor (Item 21) specify either GE or Emerson motor. GE motor can be identified by (4) holes spaced at 90° around the outside diameter of the stator. Emerson motor can be identified by (4) flat edges spaced at 90° around the outside diameter of the stator.
4) If an “X” follows Model No., or Date Mfg. on brass ID tag, consult factory for ordering any parts.
5) See FM0160 Parts Price Sheet for listing of parts prices.
6) “NA” indicates, not applicable.

© Copyright 2014 Zoeller Co. All rights reserved.

REPLACEMENT PARTS LIST FOR MODEL “V282”.

See page 7 for illustration.

				MODELS: V282-A,B	V282-C
REF. NO.	DESCRIPTION	QTY	NOTES	8/98 thru 5/10	6/10 thru Current
1	Cover & Cord (Cord, HO7RN-F 3G1.5Mm-20' length no plug)	1	2	152030	152030
	Cover & Cord (Cord-33' length BS 1363/A; UK Plug)			151265	151265
	Cover & Cord (Cord-33' length CEE 7/7; E/F Plug)			152027	152027
	Cover & Cord (Cord-15' length AS/NZS 3112; I Plug)			152026	152026
2	Cover-Mach	1	2	001077	001077
3	• Gasket, Case/Cover	1		001011	001011
4	• Wire Pkg (2) Wires	1		004756	004756
5	Capacitor & Clamp Asm	1		002381	002381
6	Housing, Mtr-&Str	1	1	003172	150949
7	Bearing, Sleeve	1		001012	N/A
	• Bearing, Radial			N/A	006703
8	• Handle	1		217069	217069
9	Cord Term&Seal (HO7RN-F 3G1.5Mm-20' length no plug)	1	2	152021	152021
	Cord Term&Seal (33' length BS 1363/A; UK Plug)			151263	151263
	Cord Term&Seal (33' length CEE 7/7; E/F Plug)			152018	152018
	Cord Term&Seal (15' length AS/NZS 3112; I Plug)			152016	152016
10	Clamp, Strain Relief	1	2	152191	152191
11	• Seal, Cord-Asm & Str Rlf	1	2	151312	151312
12	• Plug, Test-White	2		034090	034090
13	• Seal, Thru Wall Term	3		003402	003402
14	Rotor & Brg	1		007978	150874
15	• Bearing, Radial	1		001013	010069
16	• Seal, Mtr Hsg	1		001014	001014
17	• Oil, Dielectric	1		003168	011066
18	Adapter-Mach	1		001003	001003
19	• Seal, Shaft	1		002430	002430
20	Flange Pkg 2" Npt	1		10-1305	10-1305
	Flange Pkg 3" Npt			10-1306	10-1306
21	Impeller	1		002999	002999
22	Housing, Pump-Mach	1		217012	217012
23	• Screw, #6-32 X .25 RHM Sl Tc Stlgr	3		001877	001877
24	• Screw, #10-24 X .375 RHM-Sl SS	1		001883	001883
25	• Screw, .25-20 X .75 HHm-SS	4		001916	001916
26	• Screw, .5-13 X 2 HH Cap-SS	2		001909	001909
27	• Washer, SS-1.25Od X .562Id X .078	2		002115	002115
28	• Screw, .313-18 X 1 HH Cap-SS	4		002608	002608
29	• Screw, .25-20 X 1 HHm-SS	4		007790	007790
¤	Rebuild Kit			152038	152039

• Items included in Rebuild Kit. ¤ Not Shown in Illustration.

NOTES:

1) Mtr. Hsg., Brg., Stator & Term. (Item 13) are preassembled at the factory and must be replaced as a unit. Stator is permanently attached to the Motor Housing. Plug (Item 19); Seal, Thru Wall Term. (Item 20) and Bearing - Upper (Item 14) are replaceable.
2) When ordering these parts, customer must identify if switch is a General Electric switch.
3) When ordering Motor Housing, Bearing, Stator and Term. (Item 13) or Rotor (Item 21) specify either GE or Emerson motor. GE motor can be identified by (4) holes spaced at 90° around the outside diameter of the stator. Emerson motor can be identified by (4) flat edges spaced at 90° around the outside diameter of the stator.
4) If an “X” follows Model No., or Date Mfg. on brass ID tag, consult factory for ordering any parts.
5) See FM0160 Parts Price Sheet for listing of parts prices.
6) “NA” indicates, not applicable.

© Copyright 2014 Zoeller Co. All rights reserved.

REPLACEMENT PARTS LIST FOR MODEL “BL282”.

See page 7 for illustration.

				MODELS: BL282-A	BL282-B
REF. NO.	DESCRIPTION	QTY	NOTES	11/95 thru 11/09	12/09 thru Current
1	Cover & Cord (Cord-10' length CEE 7/7; E/F Plug)			152032	152032
2	Cover-Mach	1	2	001077	001077
3	• Gasket, Case/Cover	1		001011	001011
4	• Wire Pkg (2) Wires	1		004756	004756
5	Capacitor & Clamp Asm	1		002381	002381
6	Housing, Mtr-&Str	1	1	003172	150949
7	Bearing, Sleeve	1		001012	N/A
	• Bearing, Radial			N/A	006703
8	• Handle	1		217069	217069
9	Cord Term&Seal (10' length CEE 7/7; E/F Plug)			152023	152023
10	Clamp, Strain Relief	1	2	152191	152191
11	• Seal, Cord-Asm & Str Rlf	1	2	151312	151312
12	• Plug, Test-White	2		034090	034090
13	• Seal, Thru Wall Term	3		003402	003402
14	Rotor & Brg	1		007978	150874
15	• Bearing, Radial	1		001013	010069
16	• Seal, Mtr Hsg	1		001014	001014
17	• Oil, Dielectric	1		003168	011066
18	Adapter-Mach	1		001003	001003
19	• Seal, Shaft	1		002430	002430
20	Flange Pkg 2" Npt	1		10-1305	10-1305
	Flange Pkg 3" Npt			10-1306	10-1306
21	Impeller	1		002998	002998
22	Housing, Pump-Mach	1		217012	217012
23	• Screw, #6-32 X .25 RHM SI Tc Stlgr	3		001877	001877
24	• Screw, #10-24 X .375 RHM-SI SS	1		001883	001883
25	• Screw, .25-20 X .75 HHm-SS	4		001916	001916
26	• Screw, .5-13 X 2 HH Cap-SS	2		001909	001909
27	• Washer, SS-1.25Od X .562Id X .078	2		002115	002115
28	• Screw, .313-18 X 1 HH Cap-SS	4		002608	002608
29	• Screw, .25-20 X 1 HHm-SS	4		007790	007790
¤	Rebuild Kit			152038	152039

• Items included in Rebuild Kit. ¤ Not Shown in Illustration.

NOTES:

1) Mtr. Hsg., Brg., Stator & Term. (Item 6) are preassembled at the factory and must be replaced as a unit. Stator is permanently attached to the Motor Housing. Plug (Item 12); Seal, Thru Wall Term. (Item 13) and Bearing - Upper (Item 7) are replaceable.
2) When ordering Motor Housing, Bearing, Stator and Term. (Item 6) or Rotor (Item 14) specify either GE or Emerson motor. GE motor can be identified by (4) holes spaced at 90° around the outside diameter of the stator. Emerson motor can be identified by (4) flat edges spaced at 90° around the outside diameter of the stator.
3) If an “X” follows Model No., or Date Mfg. on brass ID tag, consult factory for ordering any parts.
4) See FM0160 Parts Price Sheet for listing of parts prices.
5) “NA” indicates, not applicable.

© Copyright 2014 Zoeller Co. All rights reserved.

REPLACEMENT PARTS ILLUSTRATION FOR MODELS “U282” AND “BK282”

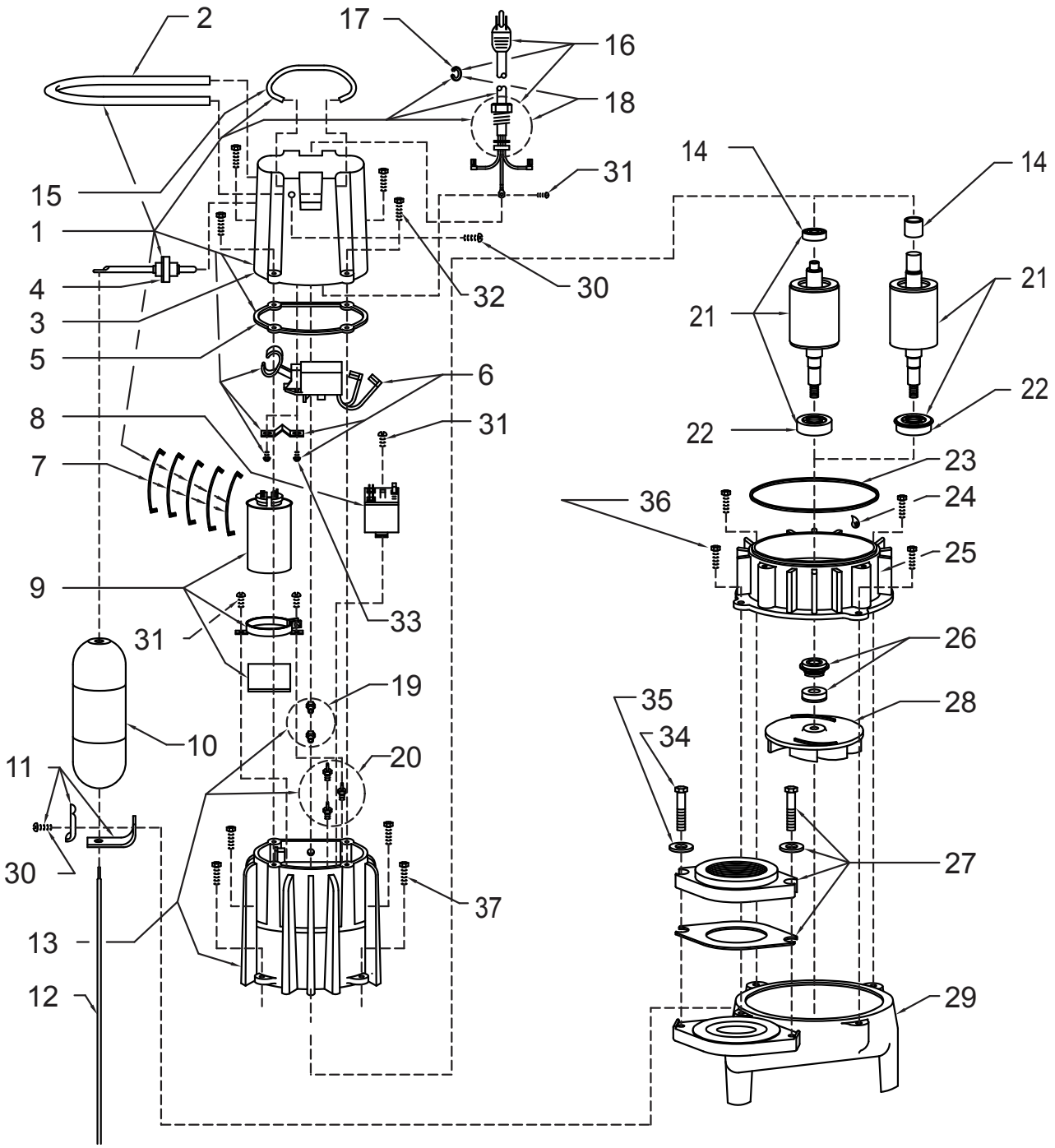

© Copyright 2014 Zoeller Co. All rights reserved.

REPLACEMENT PARTS ILLUSTRATION FOR MODELS “V282” AND “BL282”

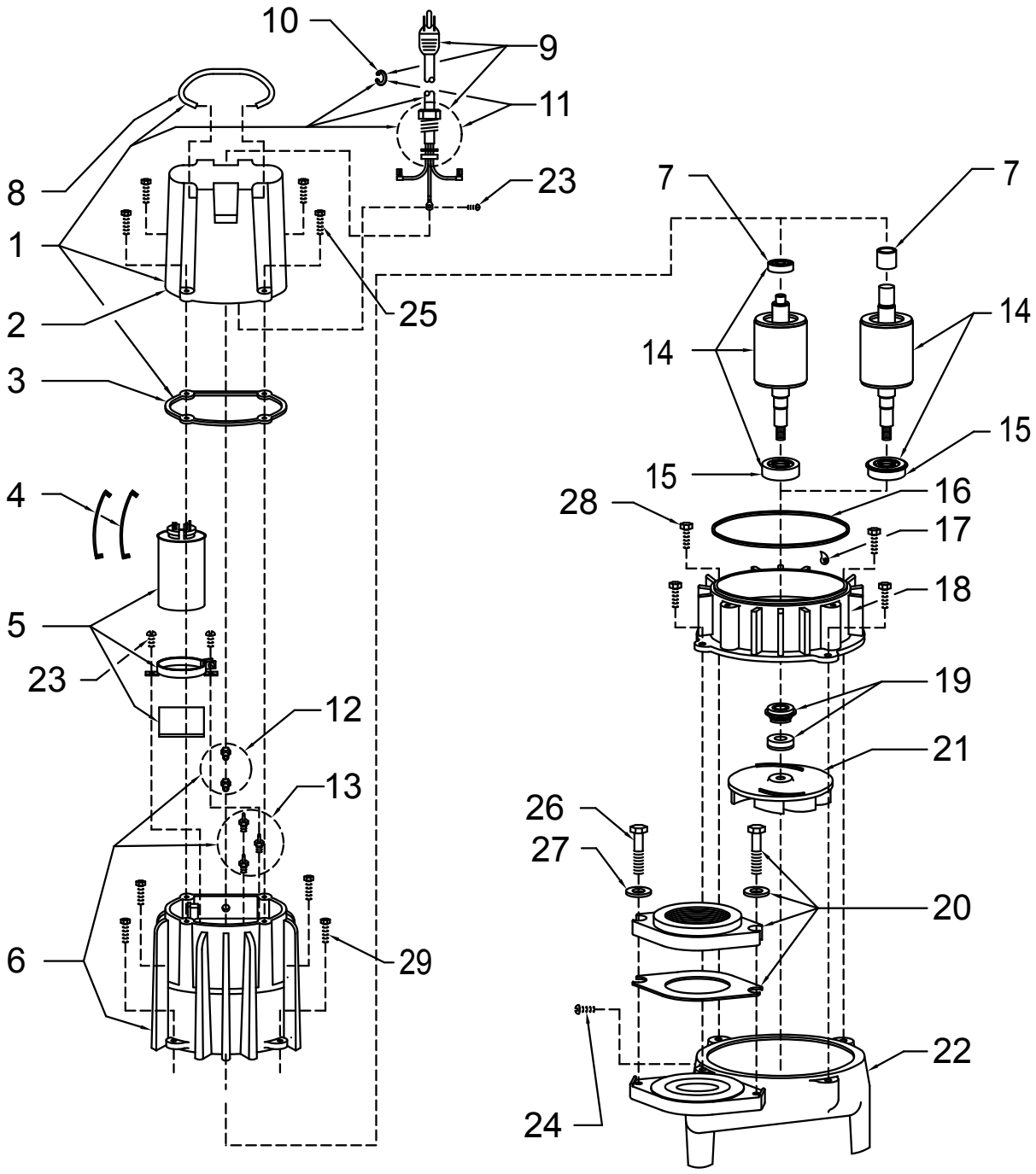

SK924

© Copyright 2014 Zoeller Co. All rights reserved.

NOTES

ZOELLER®
PUMP COMPANY

MAIL TO: *P.O. BOX 16347 • Louisville, KY 40256-0347*
SHIP TO: *3649 Cane Run Road • Louisville, KY 40211-1961*
(502) 778-2731 • 1 (800) 928-PUMP • FAX (502) 774-3624

Your Peace of Mind is Our Top Priority®

visit our web site:
www.zoeller.com

© Copyright 2014 Zoeller Co. All rights reserved.