Your Peace of Mind is Our Top Priority®

Product information presented here reflects conditions at time of publication. Consult factory regarding discrepancies or inconsistencies.

ZOELLER®
PUMP COMPANY
Zoeller Family of Water Solutions™

MAIL TO: P.O. BOX 16347 • Louisville, KY 40256-0347
SHIP TO: 3649 Cane Run Road • Louisville, KY 40211-1961
(502) 778-2731 • 1 (800) 928-PUMP • FAX (502) 774-3624

SECTION: 4.10.160
FM1936
0514
Supersedes
0603

visit our web site: www.zoeller.com

Submersible Wastewater Pump Association
SWPA MEMBER

DESIGNED • MACHINED • ASSEMBLED IN THE USA

FLOAT SWITCH BRACKETS

(For Use with Weighted Floats)

Also see FM0526 for Float Tree Assemblies for floats that use clamp type hangers.

PART NO: 10-0438
WEIGHT: 2 LBS.

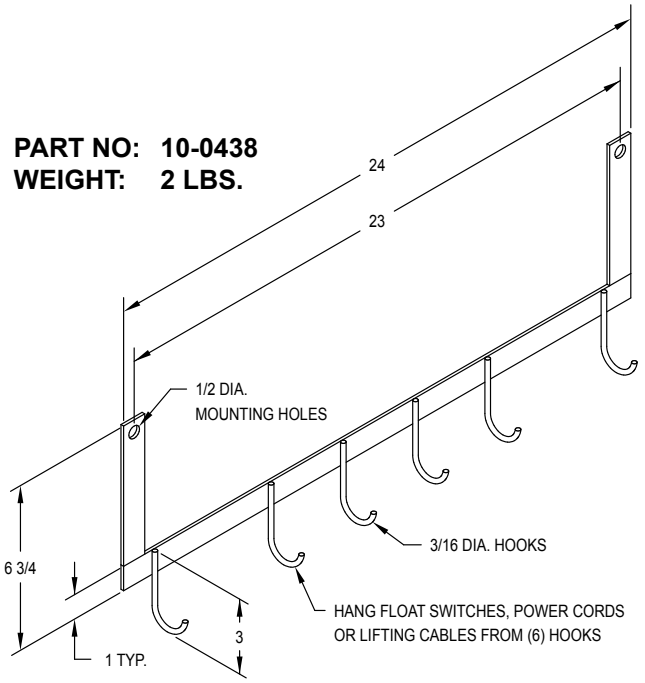

- TYPE 304 STAINLESS STEEL CONSTRUCTION.
- WALL OR ACCESS FRAME MOUNTING.

zepa0298

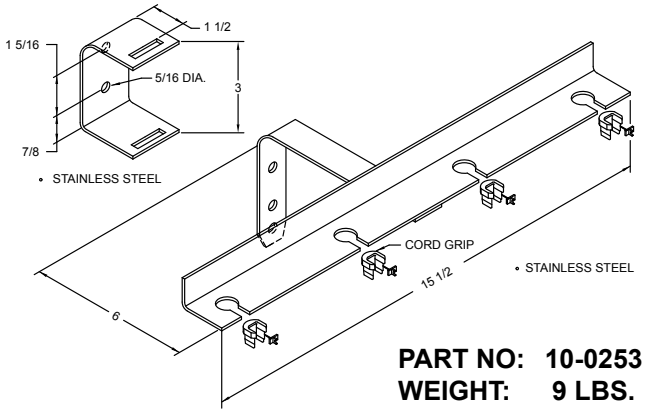

PART NO: 10-0253
WEIGHT: 9 LBS.

zepb0513

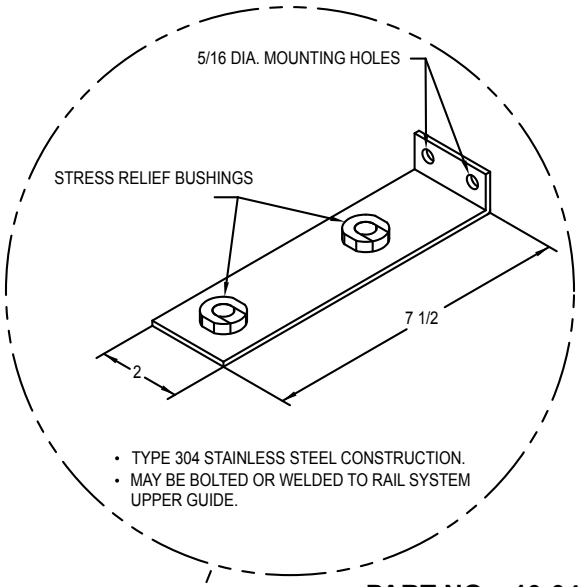

- TYPE 304 STAINLESS STEEL CONSTRUCTION.
- MAY BE BOLTED OR WELDED TO RAIL SYSTEM UPPER GUIDE.

PART NO: 10-0436
WEIGHT: 1 LB.

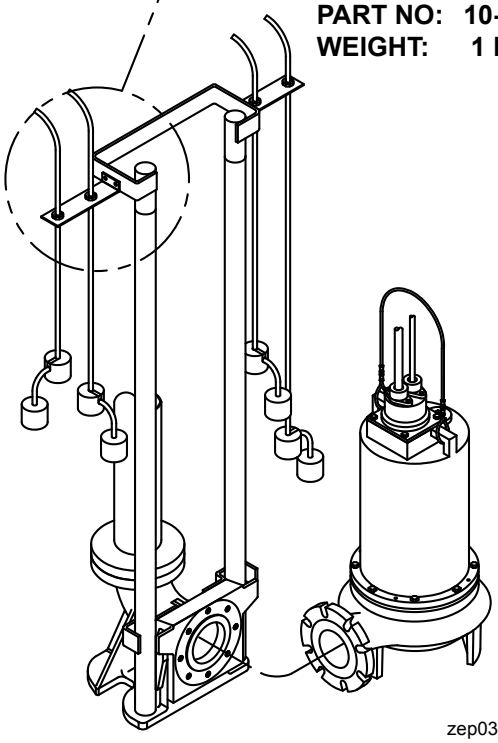

zep0300

© Copyright 2014 Zoeller Co. All rights reserved.

PUMP LIFTING CABLES

Lifting Cables for pump models: 611 - 661 and X611 - X661

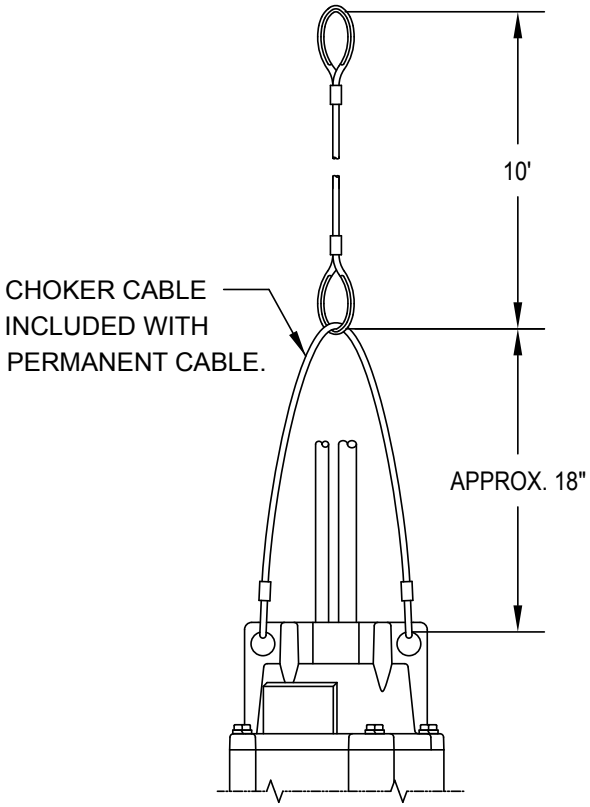

PERMANENT

ZEPA0191A

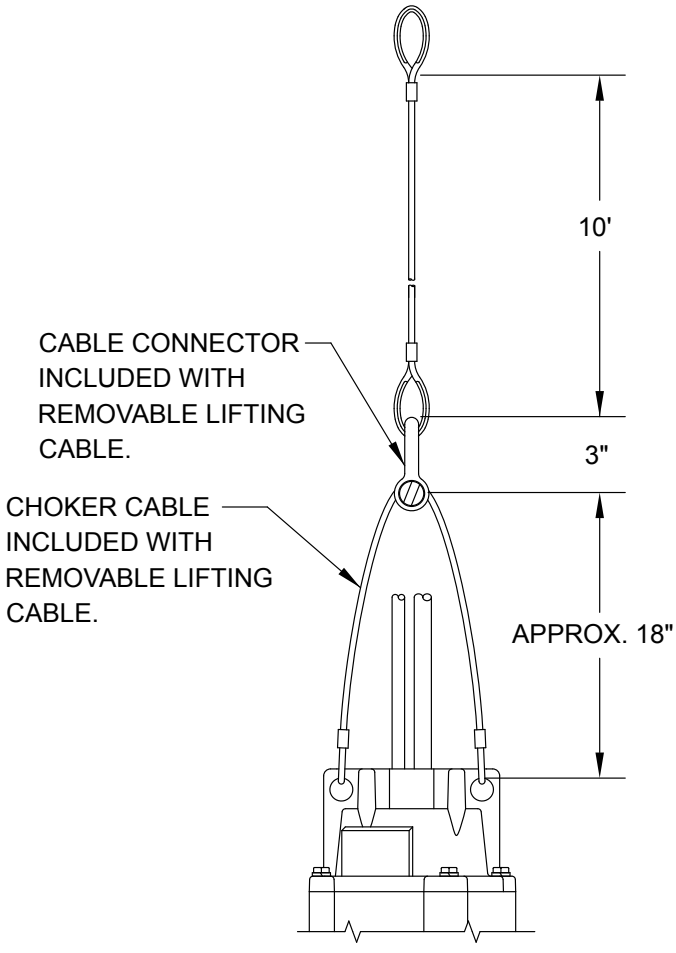

REMOVABLE

ZEPA0191B

P/N	Description	Material	Wt. Lbs.
6039-0026	Choker Cable	Stainless Steel	1
6039-0027	Choker Cable	Galvanized Steel	1
6039-0028	Permanent Cable 10’	Stainless Steel	4
6039-0029	Permanent Cable 10’	Galvanized Steel	4
6039-0030	Removable Cable 10’	Stainless Steel	5
6039-0031	Removable Cable 10’	Galvanized Steel	5
6039-0032	Permanent Cable 15’	Stainless Steel	6
6039-0061	Permanent Cable 25’	Stainless Steel	8
6039-0062	Permanent Cable 20’	Stainless Steel	7

Additional lengths available. Consult Factory.

ZOELLER® PUMP COMPANY

MAIL TO: *P.O. BOX 16347 • Louisville, KY 40256-0347*
SHIP TO: *3649 Cane Run Road • Louisville, KY 40211-1961*
(502) 778-2731 • 1 (800) 928-PUMP • FAX (502) 774-3624

Your Peace of Mind is Our Top Priority®

visit our web site: www.zoeller.com

© Copyright 2014 Zoeller Co. All rights reserved.